CR-X300

(without connector cover)

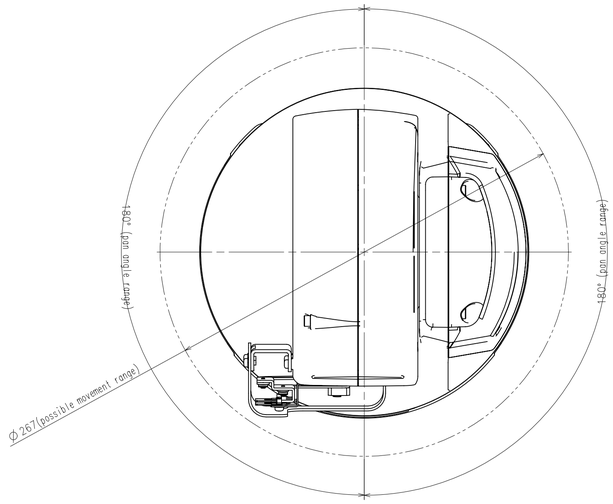

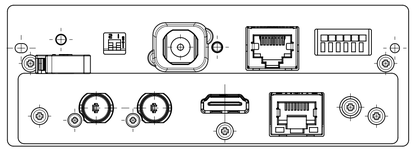

External connection connector

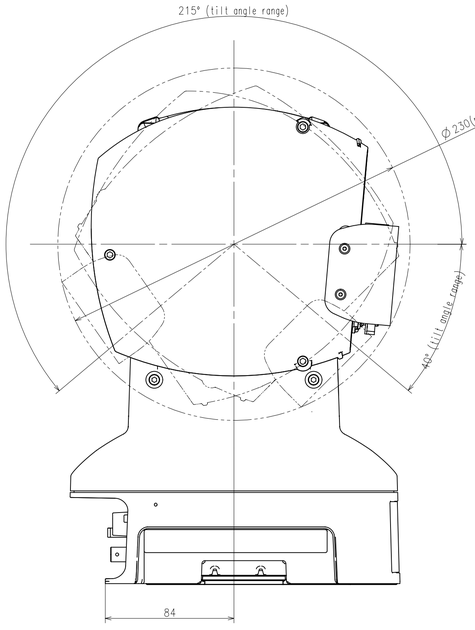

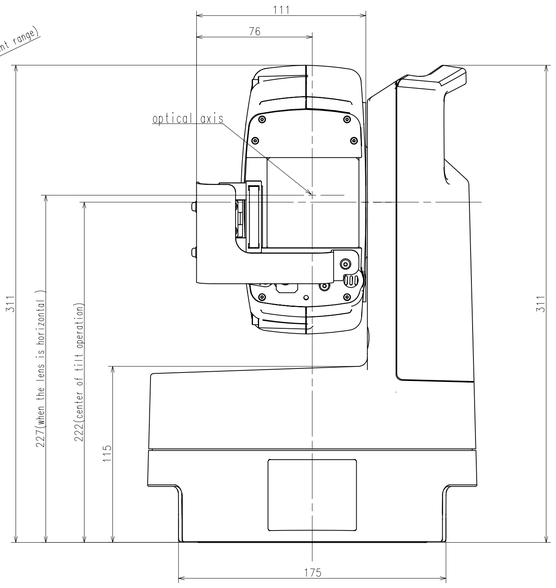

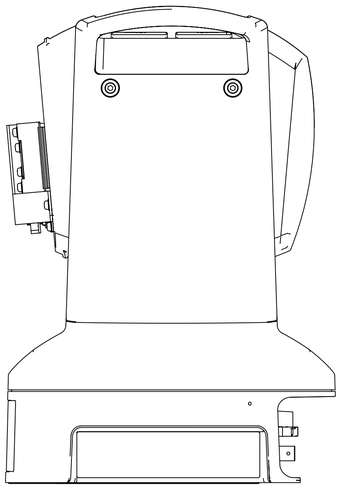

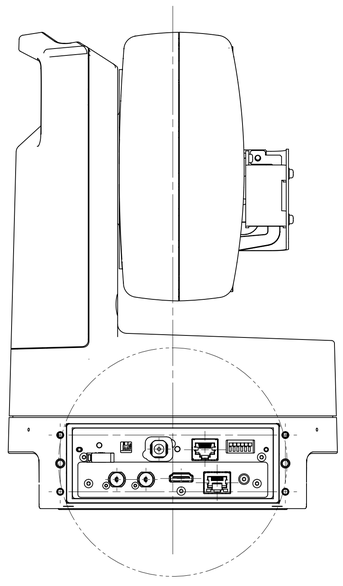

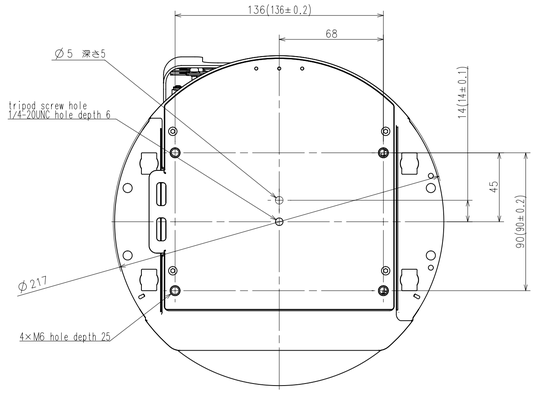

Unit:mm