CR-X300

(with connector cover)

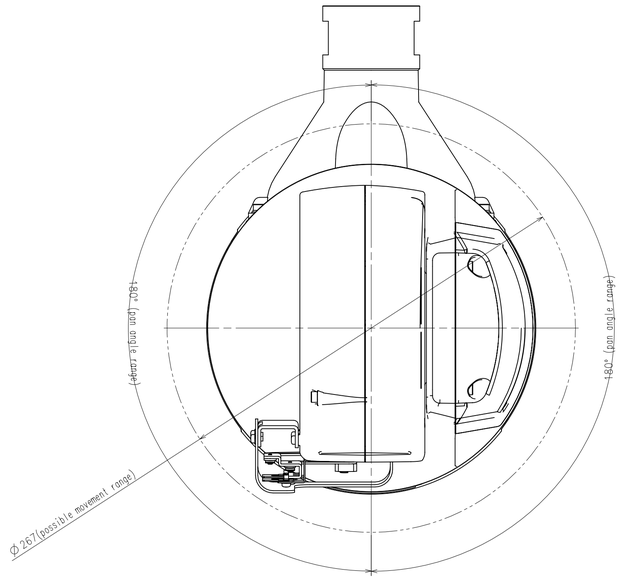

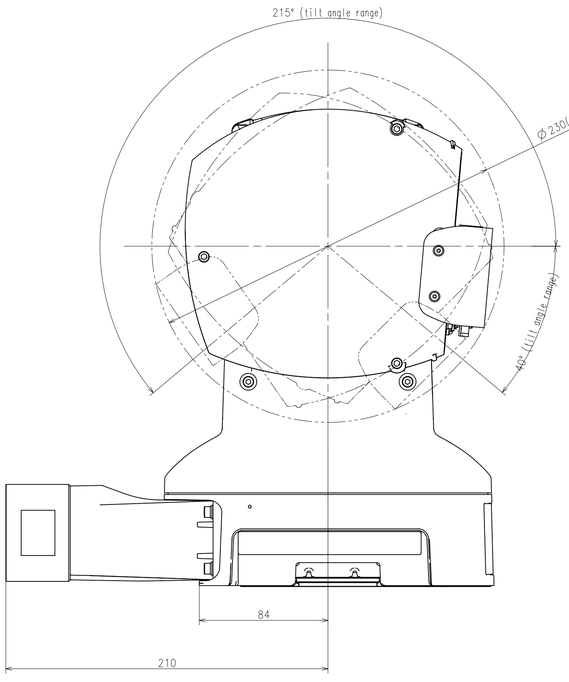

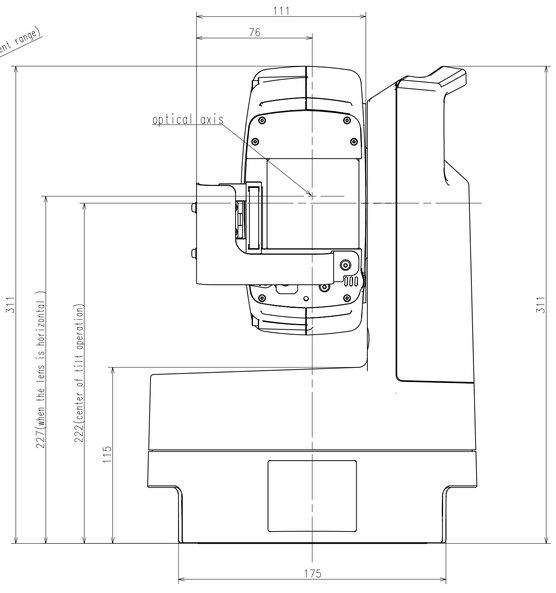

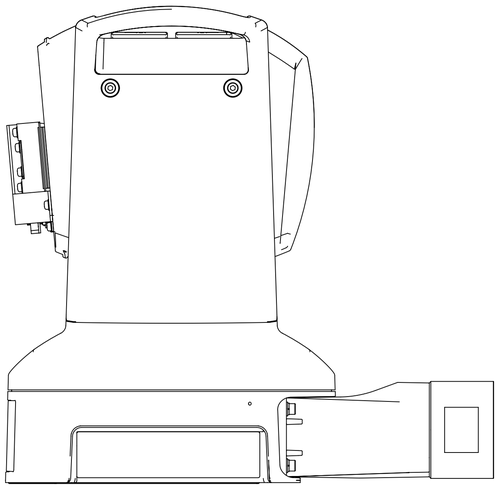

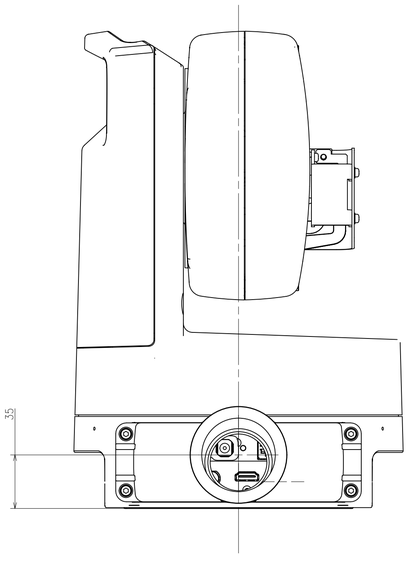

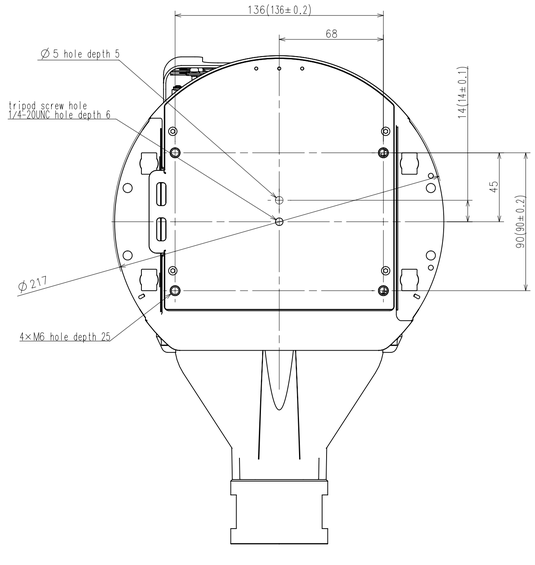

Unit:mm